Aluratone 7X0 + Flat Panel
Tongue and Groove
Walls and Ceilings
Installation Guide

2000 Ring Way Rd, St. Augustine, FL 32092 | (904) 584-1400 | rulonco.com

Receipt and Storage:

a. All material shall be delivered to the project site in the original, labeled, unopened packages. Keep packages of components unopened until it is time to acclimate to the building conditions
b. Material shall be stored flat and level in a fully enclosed space. Material can be stored in a dry unconditioned space prior to time of acclimation. **DO NOT Store Rulon products in direct sunlight.** Seventy-two hours before beginning ceiling installation, skids must be moved into the room where the HVAC system is operating and the packaging shall be opened. This is to allow the panels to adjust to the room environment. Wood panels are to be stored off the floor.
c. Care in handling must be exercised to avoid damage.

Before You Begin Installation:

a. Ensure that all necessary tools are available (see below)
b. Check Wall components to ensure all items required are at hand (see Page 2)
c. Review this guide in its entirety. If you have any questions, call Rulon Company before you start the installation
d. Installation shall be done only when the temperature and humidity closely approximate the interior conditions that will exist when the building is occupied. The heating and cooling systems shall be operating before, during, and after installation, with the humidity of the interior spaces maintained between 25% and 55%, temperature between 60 to 90 degrees F.
e. It is important that area have proper ventilation, especially in high moisture areas. There shall be no excessive build-up of heat in the space.
f. Prior to the start of installation, all exterior windows and doors are to be in place, glazed, and weather-stripped. The roof is to be watertight, and all wet trades' work is to be completed, and thoroughly dry.
g. Mechanical, electrical, and other utility service installations above the ceiling plane shall have been completed. No materials should rest or wrap around, the ceiling suspension components or connecting hangers.
h. Consult local codes for governing suspension requirements.

If You Need Further Assistance:

- If you have any questions, or if you encounter a situation not covered by this installation guide, contact the Rulon Technical Department.

  Phone: 1-800-22RULON (1-800-227-8566) or 1-904-584-1400

Tools and Equipment:

- Standard leveling devices
- Saber saw
- Miter saw
- Table Saw
- Track saw (Festool TS55 or Makita XPSO1PJT)
- Nail gun
- Painters tape
- Colored putty/ fill crayons

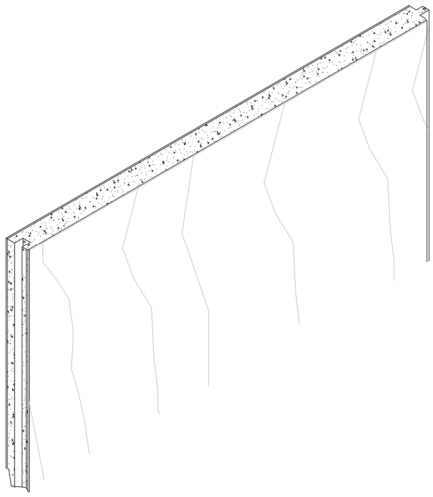

Flat Panel shown above

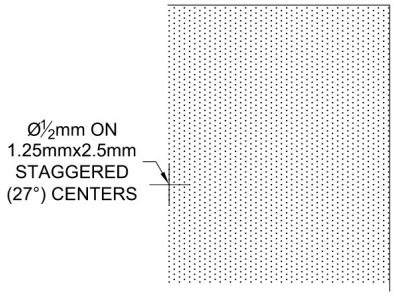

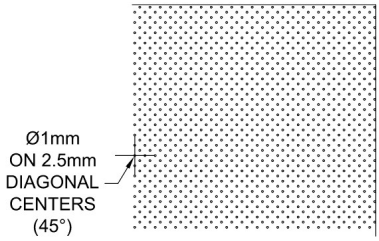

Aluratone 750 Face ***Aluratone 760 Face***

Ceiling Components:

Supplied by Rulon:

- Tongue and Groove Panels (shown above)
- Perimeter and border trim (when specified)
- Touch-up finish

Supplied by Others:

- 1½” [38 mm] finishing nails
- Furring strips
- Acoustical Blanket (when specified)
- Seismic Compliance per local code
- 15/16” [24mm] Heavy Duty T-Grid and/or suspension components

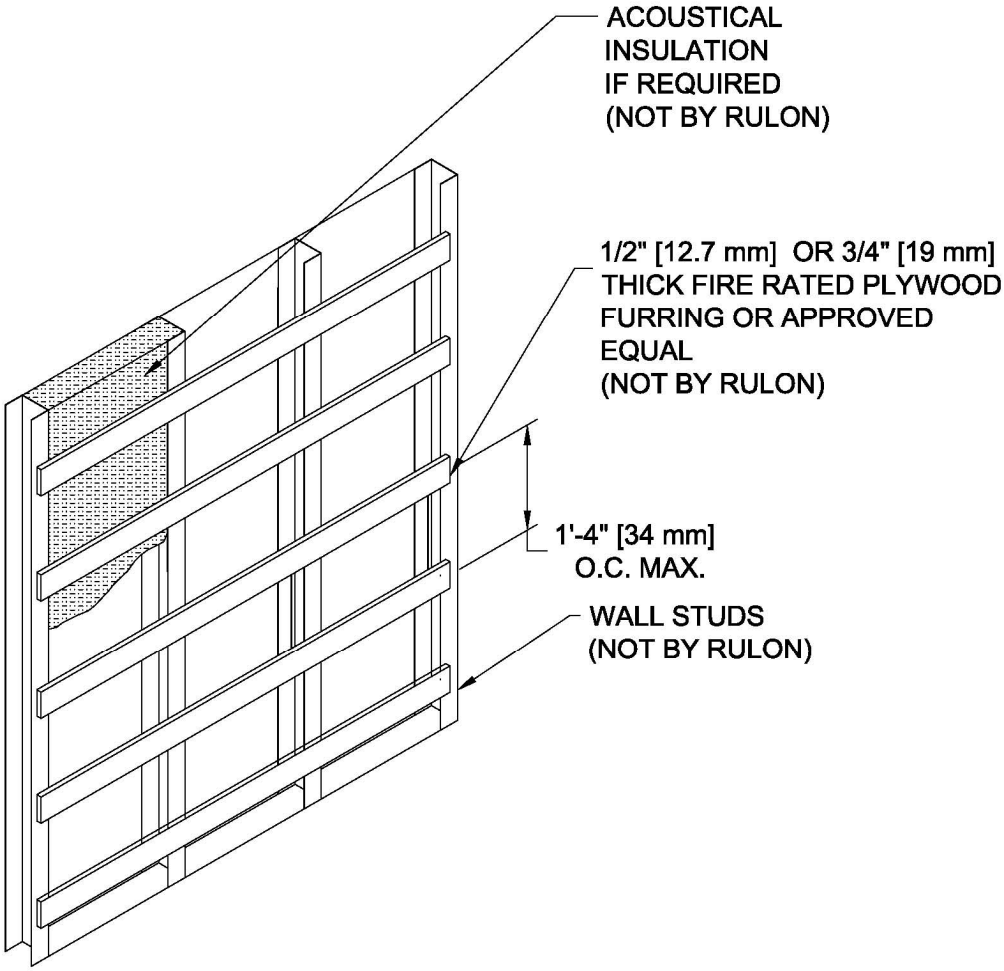

Wall Preparation Shown
(For T&G panels running vertically)

Step 1: **Wall or Ceiling Preparation**

For typical wall installations, level and install furring strips across wall studs as shown above. If acoustical insulation is required, install prior to attaching panels.

For ceiling installations, contractor-supplied heavy duty 15/16” [24mm] T-Grid mains may be installed on maximum 2’ [610mm] centers.

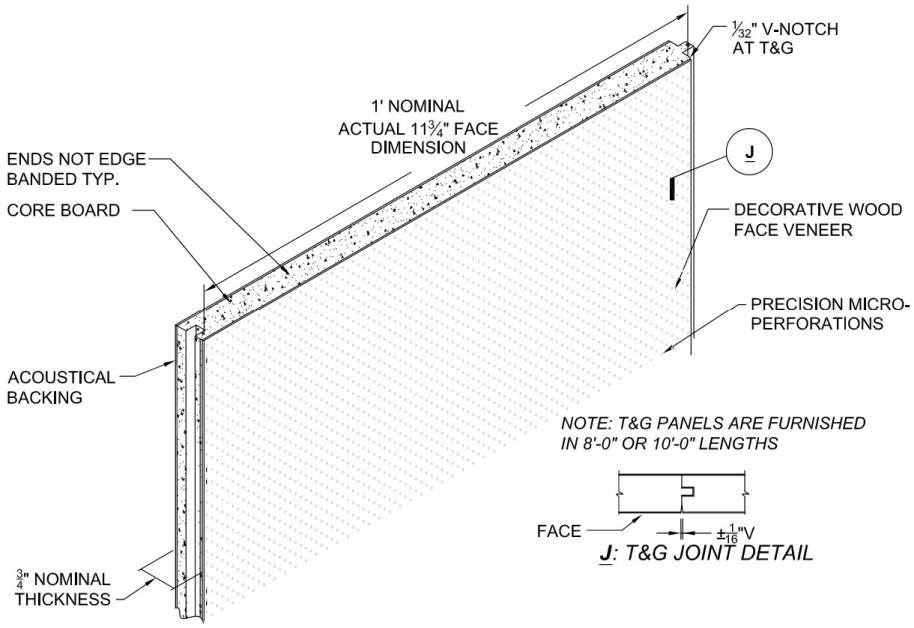

Aluratone 750 + Aluratone 760

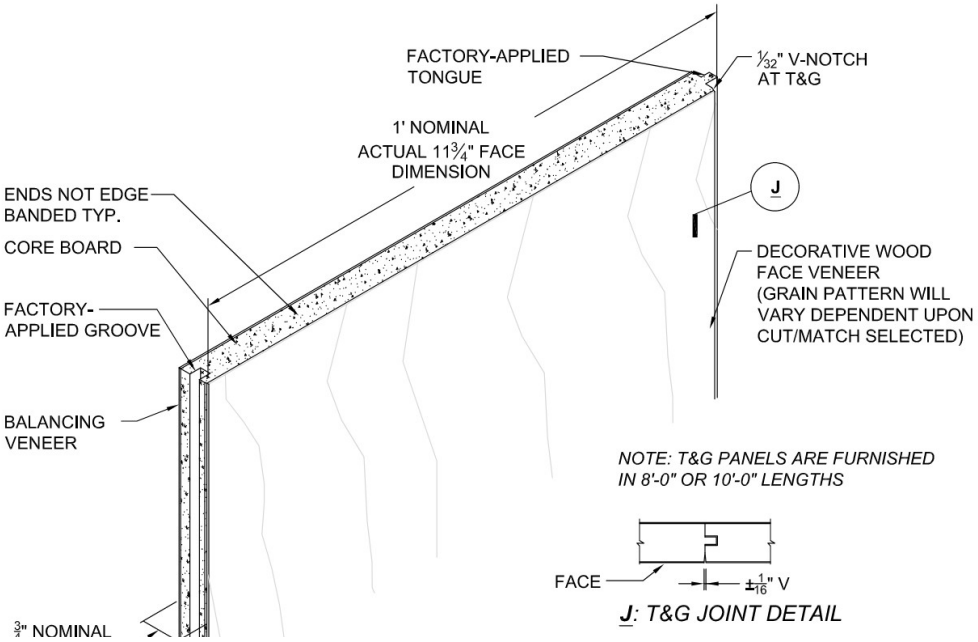

Flat Panels

Important Note: **Installed Dimension:** As detailed above, the installed dimension of a 1' [305 mm] Nominal Width Panel is 11¾" [298 mm] for typical Aluratone 7X0 + Flat Panel Tongue and Groove. If panels were manufactured to a different size or pattern than this, please consult Rulon submittal documents for the installed dimension.

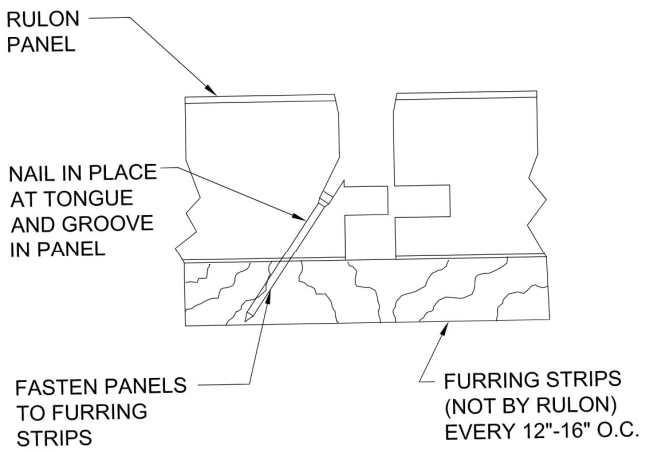

Walls Installation

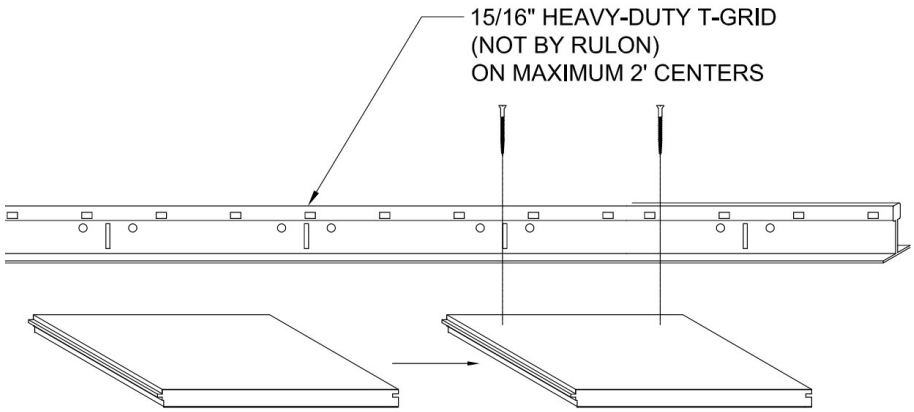

Ceilings Installation

Step 2: **Installing Panels**

For wall installations, fasten panels to furring with appropriate nails through tongue. The initial panel may need to be face-nailed close to groove side, filled, and touched-up in the field.

Ceilings should be installed with 2 screws through each main-T, fully engaged and avoiding perforations in back of panel (if applicable). Panels may not overhang the first or final main-T by more than 6” [152mm].

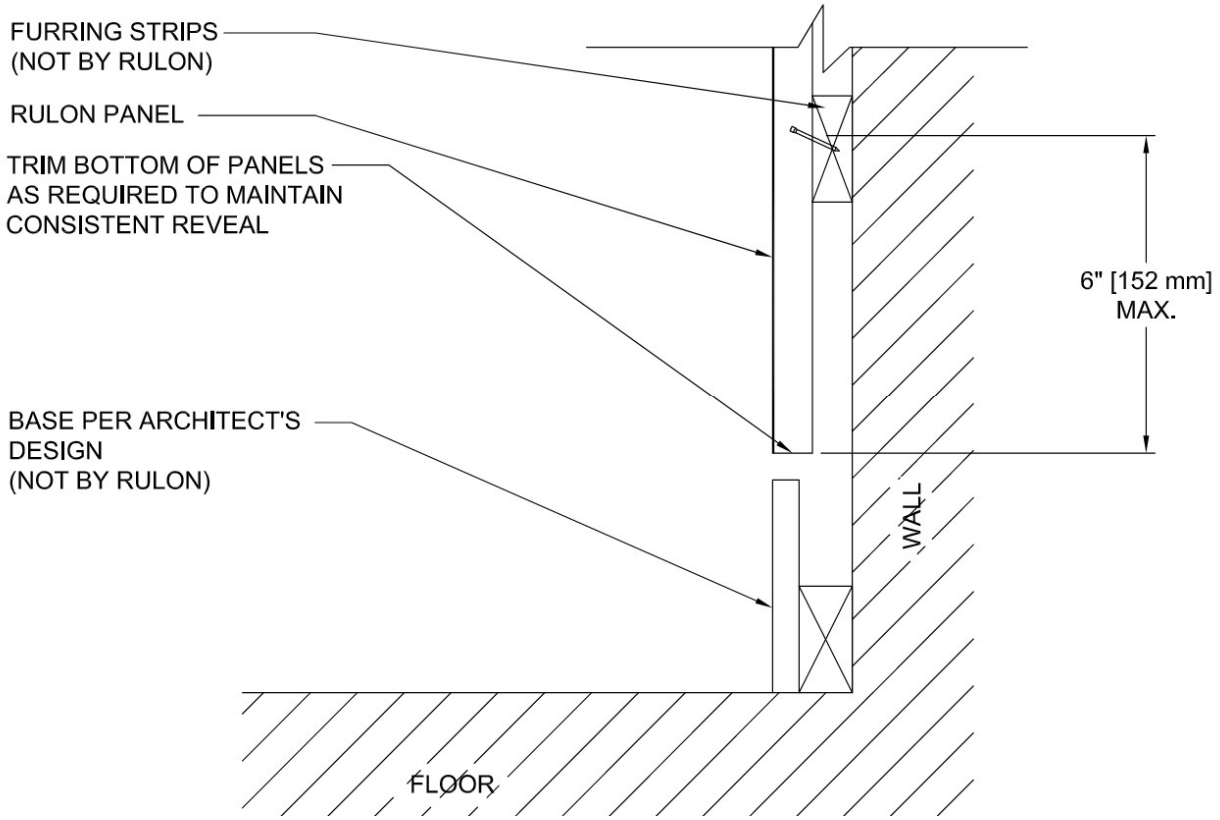

Step 3: **Bases and Borders**

Panels are to be field-trimmed to fit site conditions. Trimming should be done with the appropriate saw, with painters tape on the face veneer side to prevent splintering. Penetration cuts require a saber/jig saw, long-dimension cuts/rips and cross cuts require a track saw such as those listed in tools section. Cut panels should be touched up with Rulon-supplied finish. For the field-cut panels, Rulon will supply an adequate amount of touch up that should be field applied with a foam brush. Take care to prevent damage to the face in handling panels.

Step 4: ***Cleanup***.

A. Clean all wood panels and borders free of dirt, dust, grease, oils, and fingerprints. Routine cleaning is best accomplished with a soft, lint-free cloth lightly dampened with water or an inert household dust attractant. Allowing airborne dust, which is somewhat abrasive, to build up will tend to dull a finish over time. Refer to the Rulon Care and Maintenance document for further instructions.

B. Remove and replace all work that cannot be successfully cleaned or repaired.

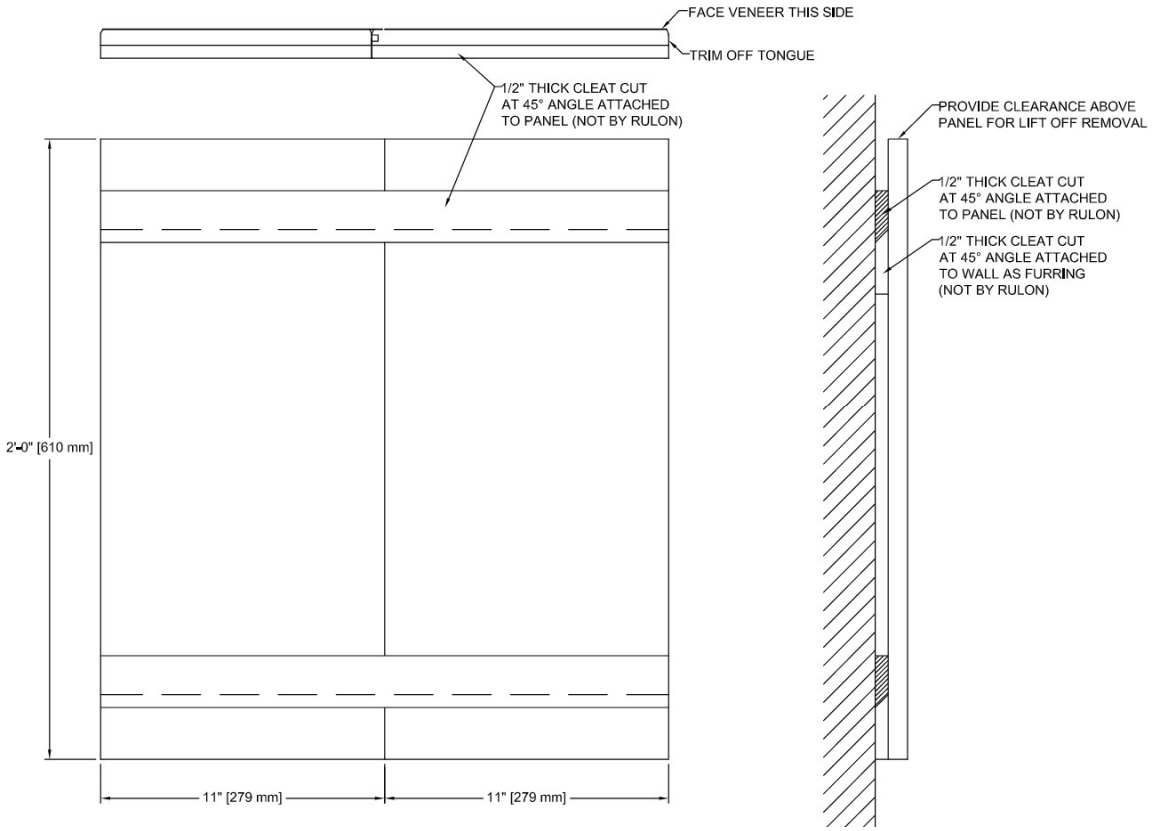

<u>Optional:</u> Wall Access Panel Detail

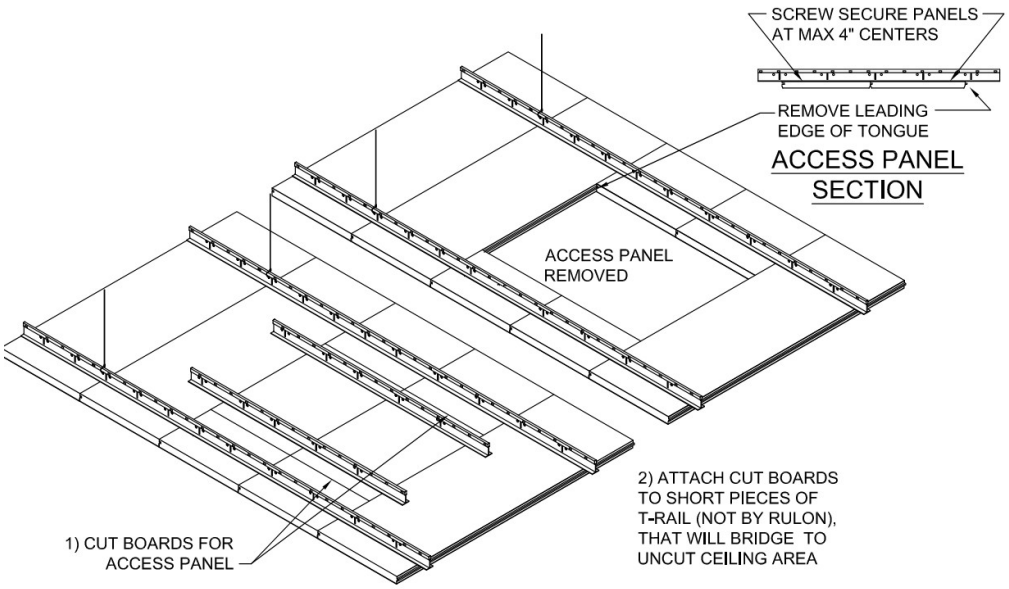

<u>Optional:</u> Ceiling Access Panel Detail –
Note: Do not exceed 2 (1' Nominal) panels wide x 20" long (each)